Floating Joints - Quick Connection Type

[Tapped] Cylinder Connector - Separate Type / Circular Type

■Separate Type

RoHS10

Type	Components	M Material	S Surface Treatment	H Hardness
FJT	① ②	S45C Equivalent	Salt-bath Nitriding	500HV~
FJTSW	① ②	SUS304	Nitriding Treatment	1000HV~
FJN	① ③	S45C Equivalent	Salt-bath Nitriding	500HV~
FJNSW	① ③	SUS304	Nitriding Treatment	1000HV~

Salt-bath Nitriding may cause uneven color, which doesn't affect mechanical function.
For details of Salt-bath Nitriding, **P.1907**.

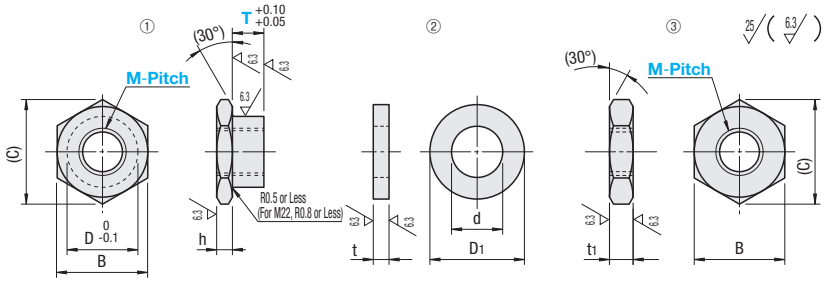

Part Number Type	M-Pitch	T Selection	h	D	B	(C)	t	t1	D1	d	Unit Price FJT	FJTSW	FJN	FJNSW
FJT FJTSW FJN FJNSW	3-0.5	2 3 4 5 6	3	6	8	9.2	3	3	9	3.2				
	4-0.7	2 3 4 5 6 8		7	10	11.5			11	4.3				
	5-0.8	3 4 5 6 8 9 10		8	12	13.9		4	13	5.3				
	6-1.0	3 4 5 6 8 9 10 12	4	10	14	16.2	4		15	6.4				
	8-1.0	4 5 6 8 9 10 12 13 15 16		13	17	19.6		5	18	8.4				
	8-1.25													
	10-1.25	4 5 6 8 9 10 12 13 15 16 19 20		16	21	24.2		6	22	10.5				
	10-1.5													
	12-1.25	5 6 8 9 10 12 13 15 16 19 20		18	23	26.6			24	13				
	12-1.5													
	14-1.5	5 6 8 9 10 12 13 15 16 19 20		21	26	30			27	15				
	18-1.5	8 9 10 12 13 15 16 19 20	5	25	30	34.6	5		31	19				
	22-1.5	12 15 20	6	27	32	36.9			35	23		-		-

When T=2, only FJT and FJN are available.

Ordering Example: Part Number - T
FJT6-1.0 - 10

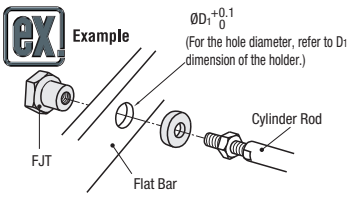

■Circular Type

RoHS10

Type	M Material	S Surface Treatment	H Hardness
FJCL	S45C Equivalent	Salt-bath Nitriding	500HV~

Salt-bath Nitriding may cause uneven color, which doesn't affect mechanical function.
For details of Salt-bath Nitriding, **P.1907**.

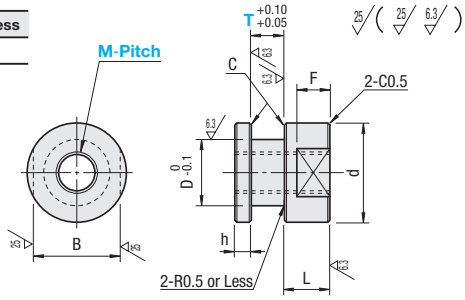

Part Number Type	M-Pitch	T Selection	h	L	D	d	B	F	C	Unit Price	T Dimensions for FJCL	Applicable Holder HLRA□ P.1533	HLRB□ P.1535	HLRC□ P.1534	HLRE□ P.1536
FJCL	3-0.5	4 5	3	5	6	10	8	3	0.2		4	HLRA6	HLRB6	HLRC6	HLRE6
	4-0.7	3 4 5		6	7	14	10	4				-	HLRB7	-	-
	5-0.8	4 5 6		7	8		12	5			6	HLRA8	HLRB8	HLRC8	HLRE8
	6-1.0	4 6 8	4	8	10	16	14	6				HLRA10	HLRB10	HLRC10	HLRE10
	8-1.25	8 9 10		9	13	20	17	7	0.5		8	HLRA13	HLRB13	HLRC13	HLRE13
	10-1.25	8		11	16	24	21	8				HLRA16	HLRB16	HLRC16	HLRE16
	10-1.5	8 9 10													
	12-1.25	8 12		12	18	26	22	10			12	HLRA18	HLRB18	HLRC18	HLRE18
	14-1.5	12		13	21	30	27	11				HLRA21	HLRB21	HLRC21	HLRE21
	18-1.5	15		15	25	35	30	13			15	HLRA25	HLRB25	HLRC25	HLRE25

Ordering Example: Part Number - T
FJCL6-1.0 - 8