Air Cylinders

Pen-Style Type (Double Acting)

Pen-Style Type

RoHS10

MSPCB (Cylinder + Bracket)
MSPCN (Cylinder only)

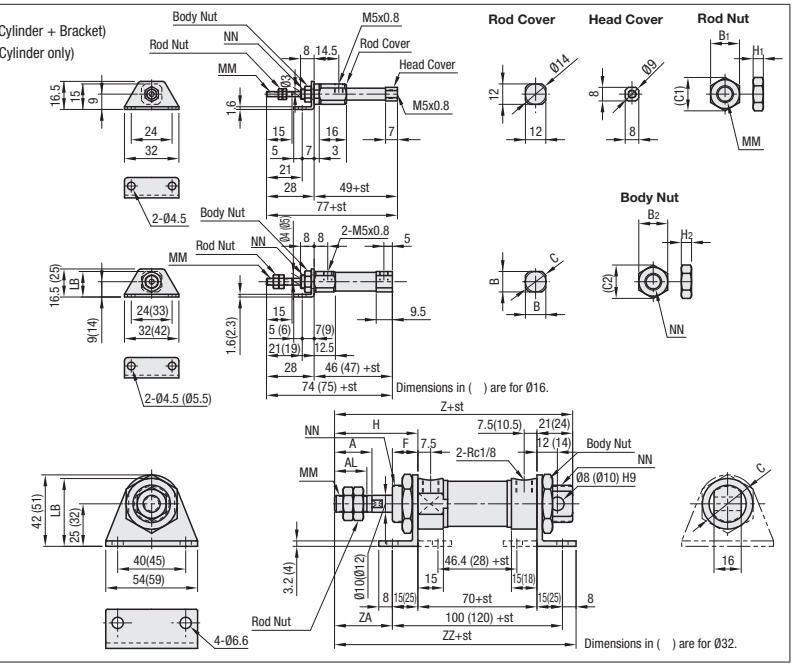

Tube I.D. (mm)	A	AL	B	B1	B2	C	C1	C2	F	H	H1	H2	LB	MM	NN	Z	ZA	ZZ
6	-	-	-	5.5	8	-	6.4	9.2	-	-	2.4	4	-	M3x0.5	M6x1.0	-	-	-
10	-	-	12	7	11	14	8.1	12.7	-	-	3.2	4	15	M4x0.7	M8x1.0	-	-	-
16	-	-	18	8	14	20	9.2	16.2	-	-	4	4	23	M5x0.8	M10x1.0	-	-	-
20	20	18	-	13	30	28	15	34.6	12	38	5	6	38.4	M8x1.25	M22x1.5	129	23	131
25	22	20	-	17	30	33.5	19.6	34.6	15	49	6	6	39.9	M10x1.25	M22x1.5	140	34	142
32	22	20	-	17	32	37.5	19.6	37	18	52	6	8	50	M10x1.25	M24x2.0	146	27	155

Air Cylinder - Pen-Style - Structure Diagram

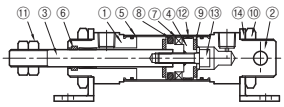

Pen-Style Type : Parts List

Number	Part Name	Ø6	Ø10	Ø16	Ø20	Ø25	Ø32
①	Rod Cover	A6061					
②	Head Cover	A6061					
③	Piston Rod	SUS303			S45C		
④	Piston	A6061 (Note)					
⑤	Tube	SUS304					
⑥	Rod Gasket	NBR					
⑦	Magnet	Plastic Magnet					
⑧	Piston Gasket	NBR					
⑨	Cushion	NBR					
⑩	Body Nut	C3604-CD			SS400		
⑪	Rod Nut	C3604-CD			SS400		
⑫	Wear Contact	Teflon					
⑬	Piston Bolt	SCM435					
⑭	Foot	SS400					

(Note) JIS-C3604-CD is for Ø10 and Ø16, POM is for Ø25.

Part Number Type	Tube I.D. (mm)	St Stroke (mm)	MSPCB Unit Price Stroke (mm) 15	25	30	45	50	60	100	MSPCN Unit Price Stroke (mm) 15	25	30	45	50	60	100
(Cylinder + Bracket) MSPCB	6	15 30 45 60		-			-		-		-			-		-
	10	15 30 45 60		-			-		-		-			-		-
	16	15 30 45 60		-			-		-		-			-		-
(Cylinder only) MSPCN	20	15 25 50 100			-	-		-				-	-		-	
	25	15 25 50 100			-	-		-				-	-		-	
	32	15 25 50 100			-	-		-				-	-		-	

Allowable Tip Lateral Load Table

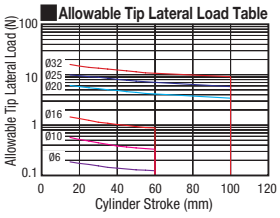

Allowable Kinetic Energy Table

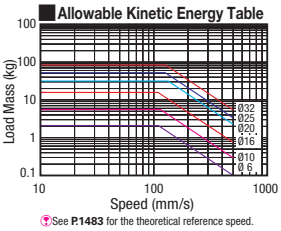

See P.1483 for the theoretical reference speed.

Theoretical Output

Unit (N)

Tube I.D. (mm)	Operating Direction	Operating Pressure (MPa) 0.2	0.3	0.4	0.5	0.6	0.7
6	Push	5.7	8.5	11.3	14.1	17	19.8
	Pull	4.2	6.4	8.5	10.6	12.7	14.8
10	Push	15.7	23.6	31.4	39.3	47.1	55
	Pull	13.2	19.8	26.4	33	39.6	46.2
16	Push	40	60	80	101	121	141
	Pull	36	54	73	91	109	127
20	Push	63	94	126	157	189	220
	Pull	47	71	94	118	141	165
25	Push	98	147	196	245	295	344
	Pull	83	124	165	206	247	289
32	Push	161	241	322	402	483	563
	Pull	138	207	277	346	415	484

Pen-Style Type : Basic Specification

Tube I.D. (mm)	6	10, 16	20~32
Operating Type	Double Acting		
Applicable Fluid	Air		
Min. Operating Pressure (MPa)	0.12	0.06	
Max. Operating Pressure (MPa)	0.7		
Pressure Resistance (MPa)	1.0		
Operating Temp. Range (°C)	5~60		
Piston Speed (mm/s)	50~500		
Cushion Mechanism	NBR		
Stroke Tolerance (mm)	0~+1.5		0~+2.0
Lubrication	Lubrication Free		
Pipe Connection Bore Dia.	M5x0.8		Rc1/8

See P.1483 for the theoretical reference speed.

Pen-Style Sensors for Cylinders

RoHS10

MSRCS (Contact Type)
MSRNS (No Contact Type)

A Accessory : 1 pc. (Mounting Brackets)

No.	Ø6	Ø10	Ø16	Ø20	Ø25	Ø32
A	41.5	53	71	84	100	123

(No.6~32)

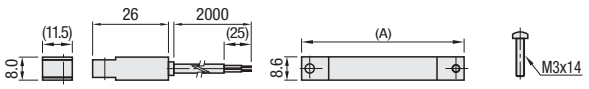

Specifications : Special Sensor for Pen-Style Type

Type	MSRCS	MSRNS
No.	6~32	6~32
Contact Type	Contact	No Contac
Contact Structures	Normally Open	
Operating Supply Voltage Range	AC/DC5~240V	DC5~28V
Load Current Range	100mA or Less	50mA or Less
Impact Resistance	30G	50G
Internal Voltage Drop	3.5V or Less	1.5V or Less
Operating Temperature	5 ~ 60°C	
Lead Wire	2 Conductors Ø3.3	3 Conductors Ø3.3
Lead Wire Length	2m	
Protection Structure	IP66	
Indicator Light	Lights when ON	
Indicator Light Color	Red	

Part Number Type	No.	Applicable Cylinder	Unit Price MSRCS	MSRNS
MSRCS MSRNS	6	MSPC□6-□		
	10	MSPC□10-□		
	16	MSPC□16-□		
	20	MSPC□20-□		
	25	MSPC□25-□		
	32	MSPC□32-□		

Ordering Example

Part Number	-	Stroke
MSPCB6 MSRCS10	-	30