[High Precision] Dovetail Slide, Rack & Pinion / Cross Roller

Features: Rack & Pinion Stages with horizontal surface moving vertically.

Horizontal Surface Z-Axis Stages, Rack & Pinion

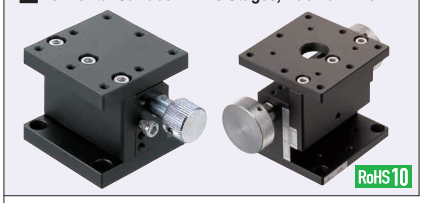

The height dimensions in ( ) are the dimensions at the center of the travel distance.

ZLFG25

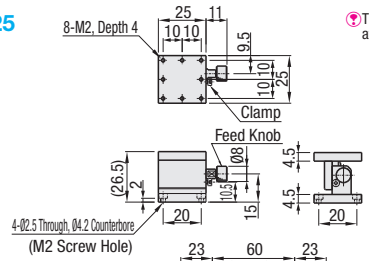

ZLFG40

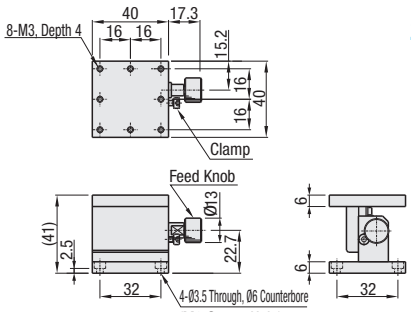

ZLFG60

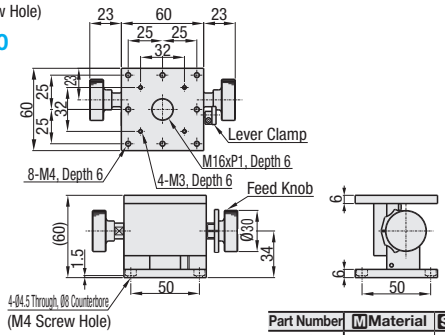

Part Number	M Material	S Surface Treatment
ZLFG25	Low Cadmium Brass	Black Fluororesin Treatment
ZLFG40	Aluminum Alloy	Black Anodize
ZLFG60		

Vernier scale will be on the opposite side of clamp mounting side.
Forcibly tightening the clamp with a hex wrench or similar tool may make it more difficult to operate. Use the maximum tightening torque for reference only: ZLFG25: 10 cN·m, ZLFG40: 20 cN·m.

Part Number Type	No.	Stage Surface (mm)	Travel Distance (mm)	Travel per Rotation (mm)	Load Capacity (N)	Travel Accuracy Straightness	Moment Load Capacity (N·m) Pitching	Yawing	Rolling	Weight (kg)	Accessory (4 pcs.) Type M-L	Unit Price
ZLFG	25	25x25	±2.5	≈8	6.9	30μm	0.6	1.0	1.5	0.08	SCB2-8	
	40	40x40	±5	≈13	9.8		0.6	1.0	1.5	0.12	SCB3-6	
	60	60x60	±10	≈17	14.7		4.0	4.0	2.5	0.47	SCB4-6	

Resolution (Vernier Scale Indication): 0.1mm/division

Ordering Example — Part Number: ZLFG60

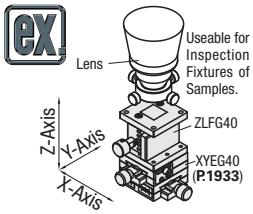

Features: Suitable for highly accurate fine adjustment of horizontal surface of Z-axis. ZLPGS has higher load capacity compared to the same size ZLPG (**P.1973**).

Horizontal Surface Z-Axis, Cross Roller (Stainless Steel)

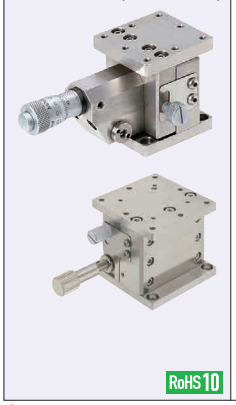

ZLPGS40 (Micrometer Head Lead 0.5)

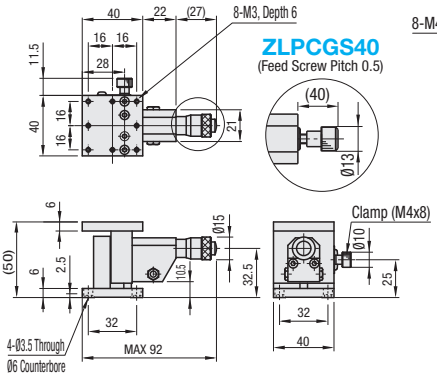

ZLPGS60 (Micrometer Head Lead 0.5)

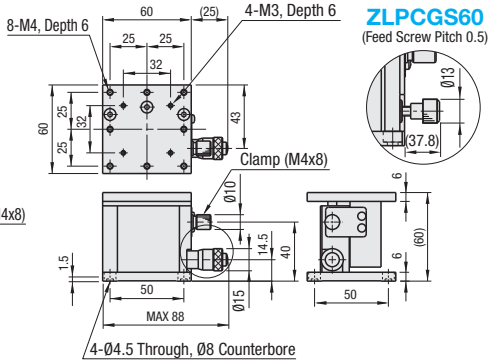

The height dimensions in ( ) are the dimensions at the center of the travel distance. See the CAD data for details. M Material: Stainless Steel

Standard Stages Similar Products (available for limited sizes only): ZLLB (**P.1971**)

Part Number Type	No.	Stage Surface (mm)	Travel Distance (mm)	Load Capacity (N)	Travel Accuracy Straightness	Moment Load Capacity (N·m) Pitching	Yawing	Rolling	Moment Rigidity (μ/N·cm) Pitching	Yawing	Rolling	Parallelism (μm)	Weight (kg)	Accessory (4 pcs.) TypeM-L	Unit Price
ZLPGS	40	40x40	±3	29.4	3μm	1.8	1.1	1.2	0.81	0.22	0.30	100	0.49	SCB3-6	
	60	60x60	±3	58.8		3.3	2.4	3.1	0.42	0.18	0.12		0.99	SCB4-6	
ZLPCGS	40	40x40	±3	29.4	3μm	1.8	1.1	1.2	0.81	0.22	0.30	100	0.47	SCB3-6	
	60	60x60	±3	29.4		3.3	2.4	3.1	0.42	0.18	0.12		0.97	SCB4-6	

Micrometer Head Resolution: 10μm/division
Knob Cover HDCVR15 (Sold Separately): Ø15 micrometer head knobs can be increased in diameter by installing the cover. P.2004
The micrometer head is only for raising and lowering the positioning stage. The scale and the amount by which the positioning stage is raised and lowered will vary.

Ordering Example — Part Number: ZLPGS40