[High Precision] Dovetail Slide, Feed Screw

Long (Selectable lead type), Square

Features: Dovetail Slide Feed Screw stage with selectable screw lead in 2mm, 5mm, 10mm. Long strokes equivalent of Rack & Pinion stages. Also suitable for vertical uses.

Z-Axis Long
(Selectable lead type)

X-Axis P.1901

RoHS10

ZLSL

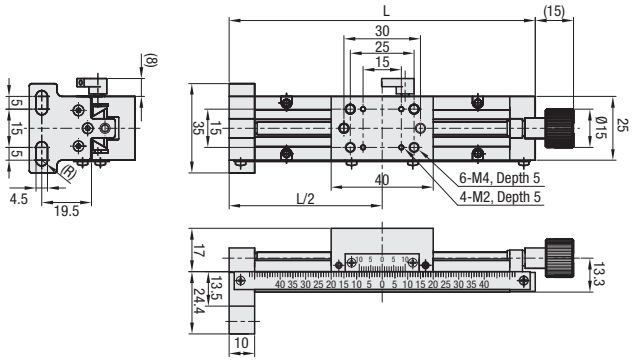

The scale in the above figure is for L120, and not for L90,150.
The external dimensions will be the same if L is the same, even if the move distance per knob rotation is different.

M Material: Aluminum Alloy
S Surface Treatment: Black Anodize

Part Number TYPE	Part Number No.	Travel per Rotation (mm)	Travel Distance (mm)	L	Load Capacity (N)	Travel Accuracy (μm) Straightness	Weight (kg)	Unit Price
ZLSL	90	2	±27	90	14.7	30	0.18	
		5						
		10						
	120	2	±42	120			0.2	
		5						
		10						
	150	5	±57	150		40	0.22	
		10						

Resolution (Vernier Scale Indication): 0.1mm/division
Knob Cover HDCVR15 (Sold Separately): Ø15 knobs can be increased in diameter by installing the cover. P.2004
Adjustable Plate XPLT40: Use this plate when connecting stages with non-matching mounting holes. P.1915

Ordering Example | Part Number | ZLSL90-5

Features: Low profile (18mm height/axis) Dovetail Slide Stages with smooth 4.2mm lead feeding.

Z Axis, Square
(Lead 4.2mm)

X-Axis P.1899
XY-Axis P.1932

ZSC60

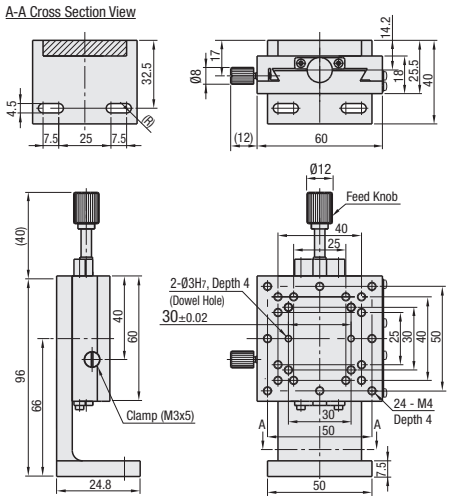

ZSC40

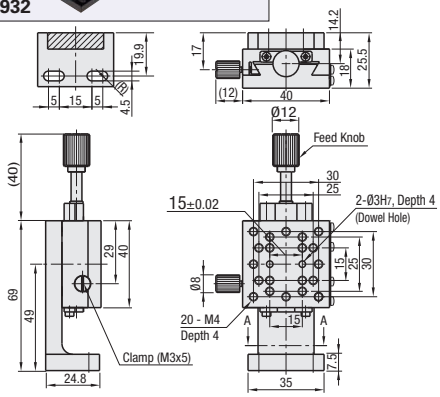

M Material: Aluminum Alloy
S Surface Treatment: Black Anodize

Part Number Type	Part Number No.	Stage Surface (mm)	Travel Distance (mm)	Travel per Rotation (mm)	Load Capacity (N)	Travel Accuracy (μm) Straightness	Weight (kg)	Accessory (2 pcs.) Type M-L	Unit Price
ZSC	40	40x40	±11	4.2	9.8	20	0.16	CBST4-12	
	60	60x60	±21		14.7	30	0.31	CBST4-12	

Resolution (Vernier Scale Indication): 0.1mm/division
Extension Cover HDEXT12 (Sold Separately): Ø12 feed screw knob can be extended. P.2004
XY-Axis Mounting Plate XPLTE: Use this plate when connecting stages with non-matching mounting holes. P.1915

Ordering Example | Part Number | ZSC40

Alterations | Part Number | - (R) | ZSC40 - R

Alteration	Clamp Position Change (Right/Left Reversed)
Spec.	ZSC□□-R ZSCL□□-R 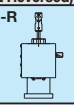
Code	R

See the CAD data for details.

Tips: Knob Extension Method

Knob length and diameter can be increased by utilizing the M6, Depth 14 tapped hole.
(Ex.) Seven Lobed Knob (2-P.1171) NKSM6-30 can be mounted to extend the knob by 36mm.
Use adhesive to prevent the knob extension from pulling off.