Toggle Clamps / Two-Pronged Fittings

Hold Down, Vertical Handle, Two-Pronged (Flange Base) / Long Arm (Flange Base)

1N=0.101972kgf

■Hold Down, Vertical Handle,Two-Pronged (Flange Base)

(Clamped)

Part Number	MC05-1
Body Material	SS400
Surface Treatment	Trivalent Chromate
Tightening Force (N)	800~1500
Weight (g)	2000
Right and Left Travel Distance (mm)	40~80
Forward and back Travel Distance (mm)	60
Arm Open-Close Angle	150°
Handle Open-Close Angle	78°
Accessory	Bolt with Rubber Material: NBR Hardness: Shore A70
Unit Price	

■Two-Pronged Fittings

RoHS10

Part Number	FTK
Body Material	SS400
Surface Treatment	Trivalent Chromate
Weight (g)	550
Toggle Clamp Arm Mounting Width	Max. 22 Min. 16
Right and Left Travel Distance (mm)	40~70
Forward and back Travel Distance (mm)	17
Unit Price	

MC05-1

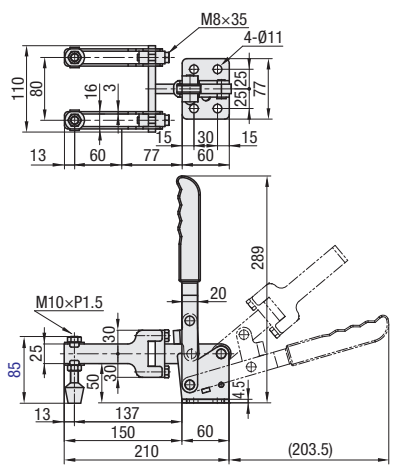

FTK

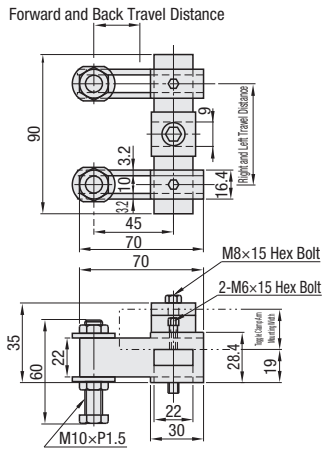

■Hold Down, Vertical Handle, Long Arm (Flange Base)

(Clamped)

Part Number	MC06-1
Body Material	SS400
Surface Treatment	Trivalent Chromate
Tightening Force (N)	1000~3700
Weight (g)	1500
Arm Open-Close Angle	119°
Handle Open-Close Angle	91°
Accessory	Steel Bolt
Unit Price	

■Hold Down, Vertical Handle, Long Arm, Small Type (Flange Base)

(Clamped)

Part Number	LN2BS
Body Material	SS400
Surface Treatment	Bright Chromate Plating
Tightening Force (N)	294~980
Weight (g)	500
Arm Open-Close Angle	140°
Handle Open-Close Angle	90°
Accessory	Steel Bolt
Unit Price	

MC06-1

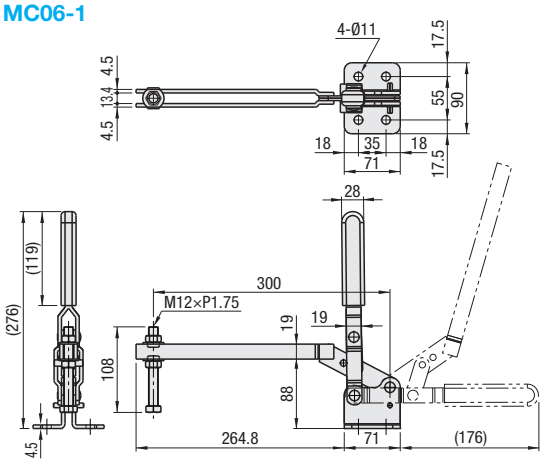

LN2BS

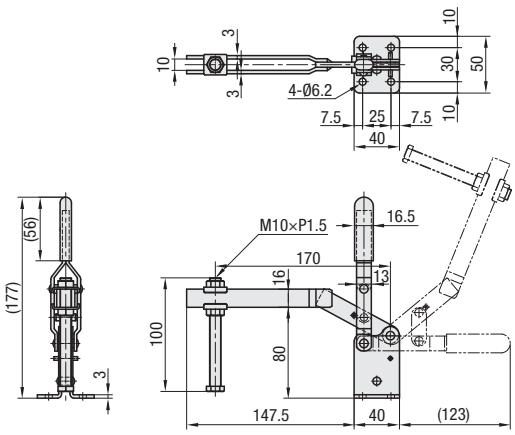

Ordering Example

Part Number
MC06-1
FTK

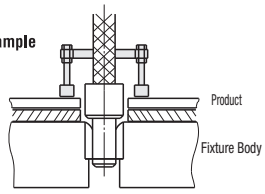

It can hold both sides of a slot pin.