Motor Covers for Conveyor - with Window

Features: The conveyor driving section is now visualized. Resin plate can also be purchased as a separate item for maintenance purpose.

Motor Covers for Conveyor with Window Head Drive / Center Drive

RoHS10

Driving Type	Part Number	M Material	S Surface Treatment
Head Drive	MOCVW	❶Main Body: Aluminum ❷Window: Polycarbonate ❸NBR: Sponge	Main Body: Paint
Center Drive	MSCPD1W		

●Head Drive

MOCVW-S152-135-□
MOCVW-S195-156-□

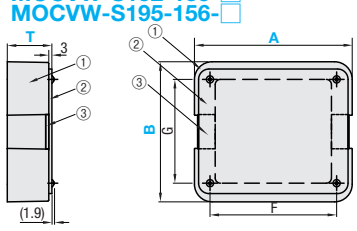

MOCVW-S195-186-49

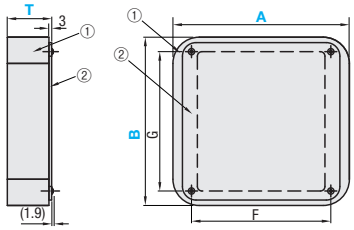

●Center Drive

MSCPD1W-L1

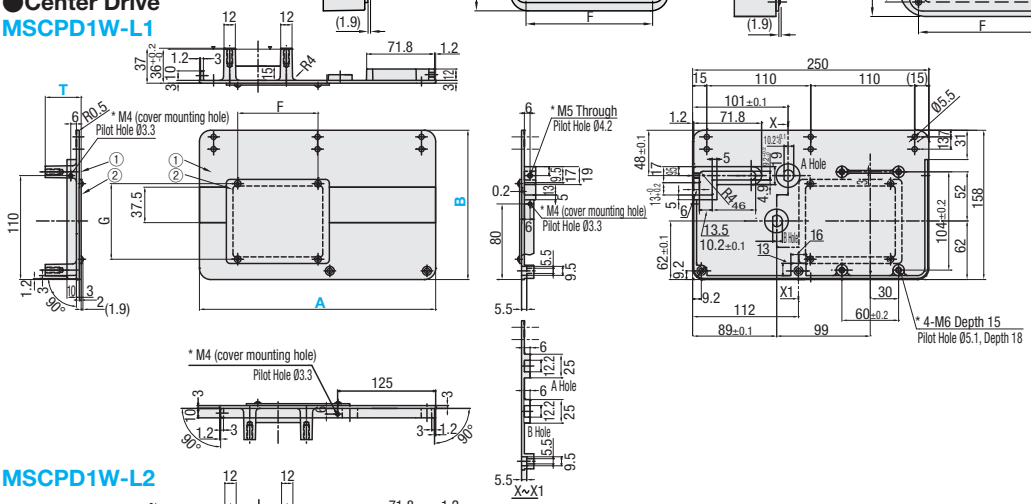

MSCPD1W-L2

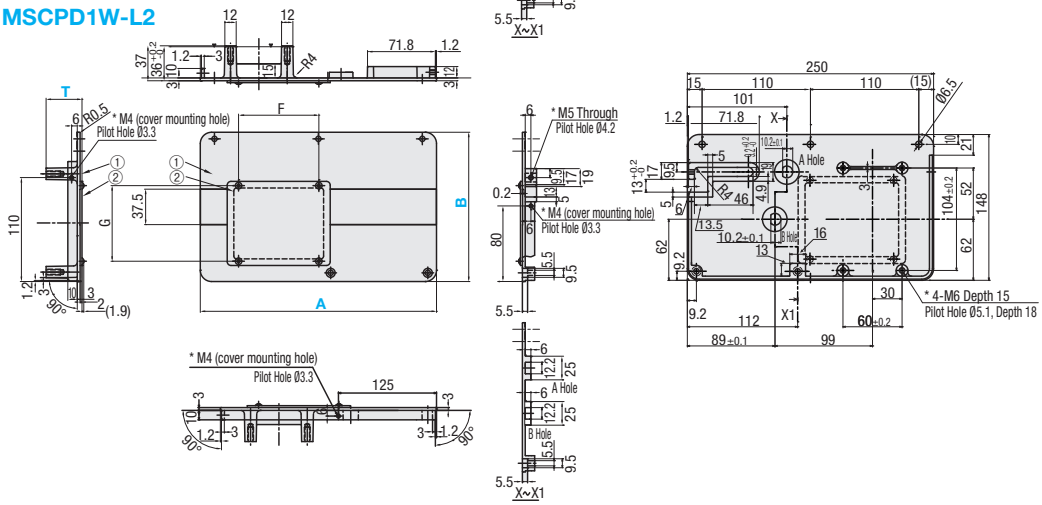

Head Drive

Part Number	A	B	T	F	G	Applicable Conveyors	Unit Price
MOCVW	S152	135	43	122	100	SVKA SVKB CVSC CVSFA CVSFC CVGA CVGB	
	S152	135	53	122	100	CVGTA	
	S195	156	43	155	124	CVSD CVSFB CVSFD CVSSA CVGC CVGD	
	S195	156	58	155	124	CVGTB	
	S195	186	49	154		CVSE CVSF	

Center Drive

Part Number	Shape Selection	A	B	T	F	G	Applicable Conveyors	Unit Price
MSCPD1W	L1	250	158	38	85	80	SVKN SVKR	
MSCPD1W	L2		148				CVGN CVGR CVGP CVGW	

Ordering Example

Head Drive								Center Drive		
Part Number	-	A	-	B	-	T		Part Number	-	Shape Selection
MOCVW	-	S152	-	135	-	43		MSCPD1W	-	L1
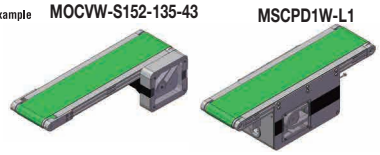
Example MOCVW-S152-135-43 MSCPD1W-L1