WIDE FLYING CAM UNITS FOR PIERCE

—MGFVW・MEVWN—

— With automatic alignment —
MGFVW500 (θ =00-40)

— Without automatic alignment —
MEVWN500 (θ =00-40)
(Economy type)

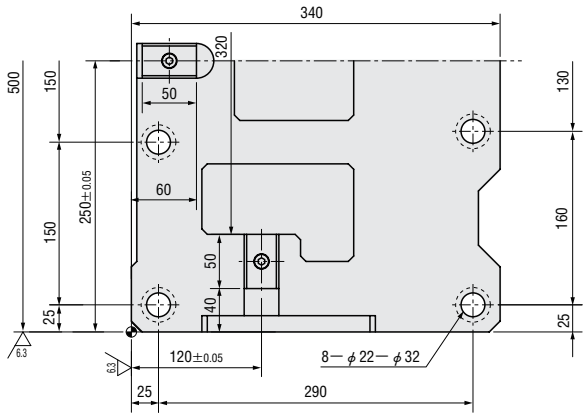

■Rear removal space

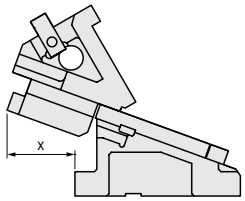

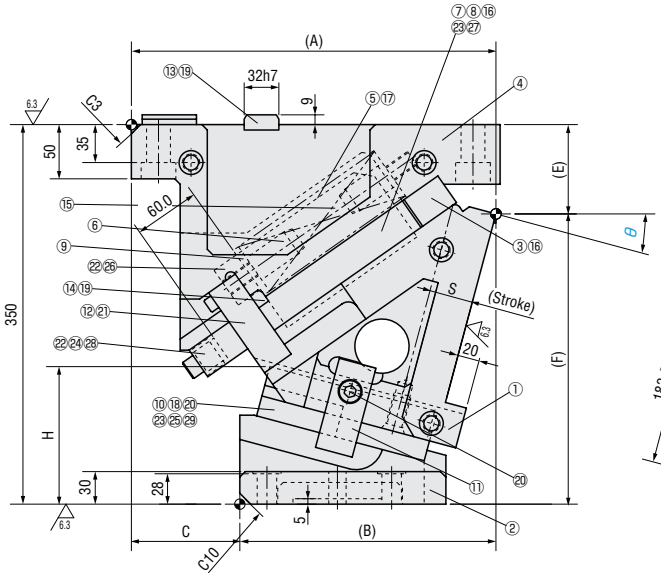

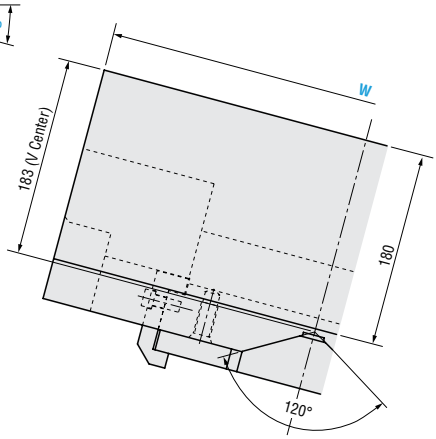

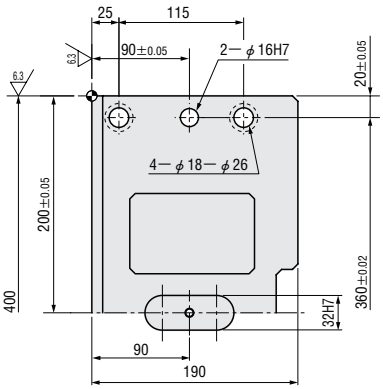

■Components table P.1213